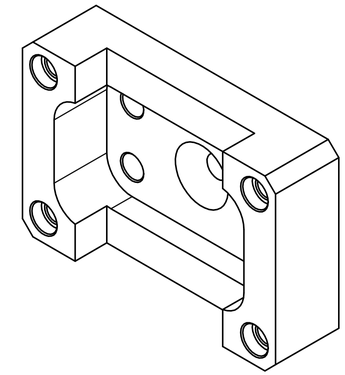

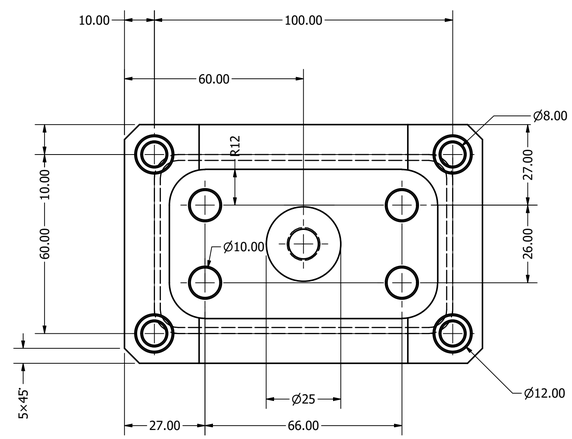

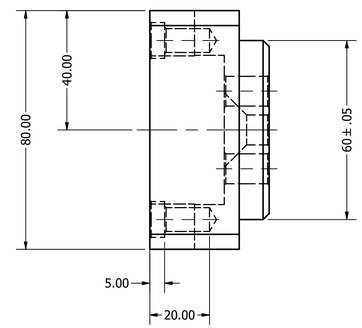

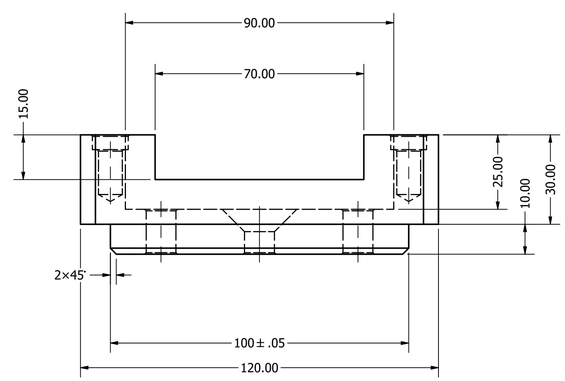

DRAWN Scorpious Gaizka	30-12-2020			
CHECKED		TITLE		
QA				
MFG				
APPROVED		SIZE D	DWG NO opdracht 2 werktekening	REV
		SCALE 1 : 1	SHEET 1 OF 1	